Static Shielding Bag Tester Operation and Maintenance

Description

The Desco A50030 "Shield-Check" static shielding bag tester and ESD simulator provides a reliable and effective means to verify the effectiveness of a metallized shielding bag's ability to protect its contents against Electro-Static Discharge (ESD) and electrostatic fields. A metal electrode pulses a 1000 volt human body model (HBM) discharge. The presence of any voltage which has penetrated the bag is then received by a battery operated sensor unit placed inside the bag under test. The sensor unit measures whether any voltage has penetrated the bag and has presented itself between its two sensor plates. The sensor displays the measured voltage level by means of LED displays. The sensor provides eight levels of detection: 10, 20, 30, 40, 50, 100, 200 and 300 volts.

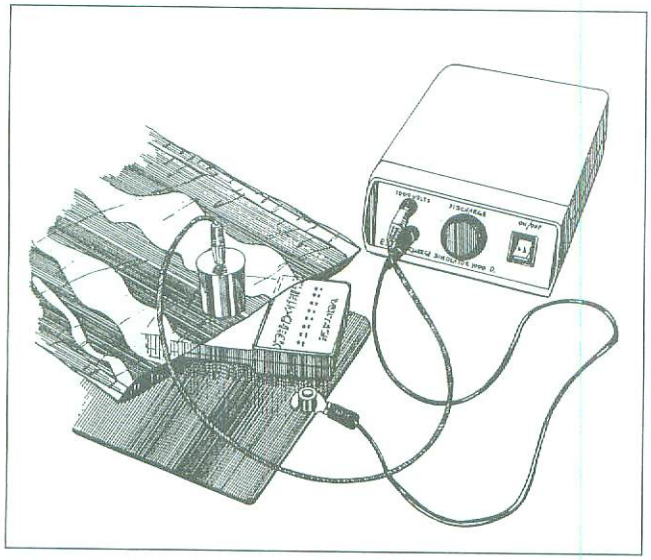

Figure 1. A50030 Shield-Check Bag Tester

The Desco A50030 is designed to allow the user to quickly and easily verify the shielding effectiveness of various types of ESD protective packages. The Shield-Check simulates the EIA-541 capacitive probe test, but is not designed to meet all test equipment requirements. This test instrument is intended for use as a cost effective tool that will help to evaluate the performance of packaging.

Inspection

Remove the meter from the carton and inspect for damage. Each unit should include the following assemblies:

1 1000D Discharge Simulator, 120VAC
1 Shield-Check Sensor
1 Red Test Lead
1 Black Ground Lead
1 Circular Metal Electrode
1 Stainless Steel Ground Plate
3 3 Volt Lithium Batteries
1 Molded Plastic Carrying Case

Properly store the meter and its component assemblies when not in use.

Operation

The A50030 Shield-Check is a quick reference indicator that allows the user to qualify the shielding effectiveness of ESD control packaging. Be sure to follow the proper test procedure when using the A50030.

1. Check the 1000D Discharge Simulator to verify that the voltage selector switch is in the correct position, 120VAC or 240VAC. The unit has a 100mA fuse located in the rear, to protect against electrical damage. Plug in to a properly grounded outlet and switch on.

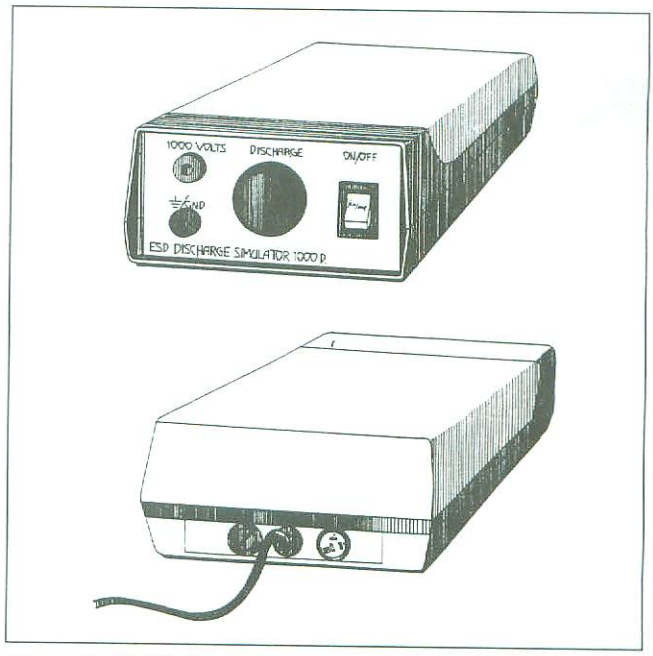

Figure 2. 1000D Discharge Simulator controls

DESCO 761 PENARTH AVE., WALNUT, CA 91789-3074 • (909) 598-2753 • FAX (909) 595-7028

2. Turn on the rocker switch located on the front panel. The switch will light when powered.

3. Connect the test leads to the Discharge Simulator. Plug the black test lead into the GND socket and red test lead into the 1000 volt socket.

4. Attach stainless steel ground plate to the other end of the black test lead, and attach the circular electrode probe to the other end of the red test lead.

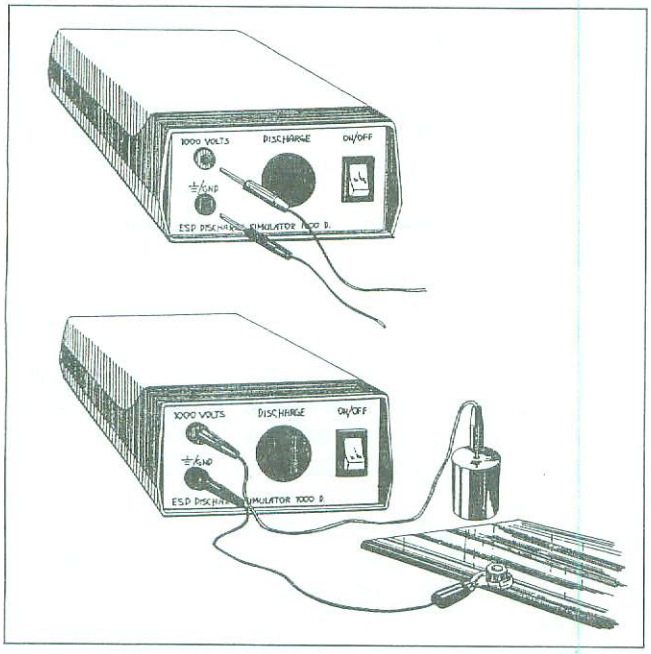

Figure 3. Assembling the A50030 for use

5. Turn on the Shield-Check sensor with the slide switch located on the left-hand side of the unit. The red "Power On" LED will light if operating properly.

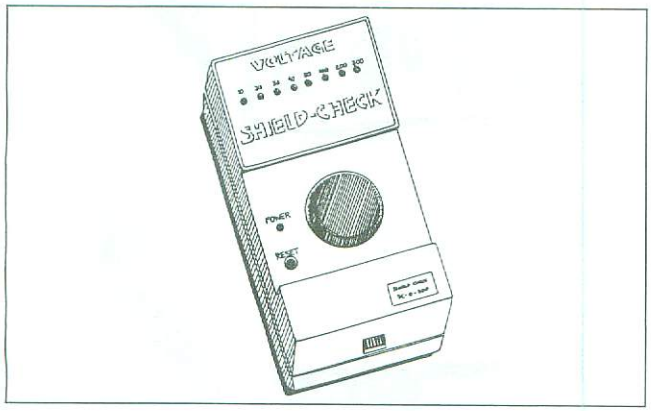

Figure 4. Shield-Check Sensor controls

6. Insert the Shield-Check sensor into the bag under test so that the LEDs face toward the operator. Place the bag and sensor on the Ground Plate. Position the circular electrode on top of the bag, making sure to align it with the round metal sensor plate on the face of the Shield-Check sensor.

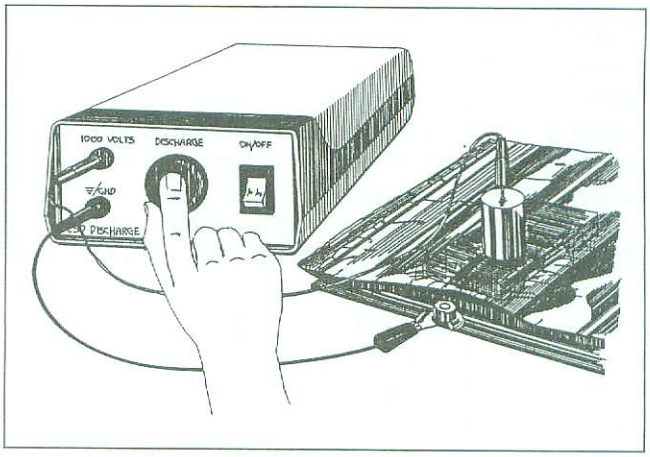

Figure 5. Testing bags with the A50030

7. Press the black discharge button on the face of the Discharge Simulator, this will deliver the test voltage. **NOTE: Make sure that the operator does not touch the bag under test, the reference plate or circular steel probe.**

8. The degree of shielding effectiveness a bag offers will be indicated by the LED response on the sensor. If no LED has been illuminated during the test, the bag has allowed less than 10 volts to be measured by the sensor. If a voltage greater than 10 volts has been sensed, one of the eight LED's will light indicating the level of voltage measured. Make note of the results and verify that the bag will offer the proper amount of ESD protection.

9. Continue testing other bags.

Theory of Operation

Shield-Check and its Discharge simulator are based on the EIA-541 capacitive probe test. The A50030 will provide the user with an indication of a packaging material's shielding effectiveness, or in other words its ability to protect against fields or voltage from penetrating into its interior. Devices or assemblies sensitive to electrostatic discharge or static fields should be protected by packaging materials that provide the proper amount of shielding.

The A50030 employs a pulsed 1000 volt test voltage to avoid the breakdown of the material under test. A bounce free leading edge is achieved by use of a mercury wetted relay. High speed integrated circuits ensure that fast pulses are registered. DC coupling permits easy checking of the threshold levels, indicated by the series of 8 LEDs on the sensor unit.

DESCO 761 PENARTH AVE., WALNUT, CA 91789-3074 • (909) 598-2753 • FAX (909) 595-7028

Shielding is a function of the resistance around the bag, so the pulse amplitude will be dependent on where in the bag the Shield-Check sensor is placed. The Shield-Check sensor has 8 voltage ranges, starting from 10 volts to 300 volts. The voltages are preset utilizing CMOS circuitry at the factory. There are no internal adjustments or potentiometers inside the unit. When a pulse is delivered, one of the LED's will light unless the sensor detects less than 10 volts between its plates. This indicates that the peak exceeds the indication but not the next higher value. Thus, when the 20 volt LED lights, the peak was between 20 and 30 volts. When not delivering a pulse, a 10M ohm resistor between the circular probe and the ground reference plate ensures that no residual charge remains from previous tests.

Battery Replacement

To change the batteries on the sensor unit, you must first remove the four self tapping screws in the rear of the case. Remove all three lithium batteries, replacing them with new CR2032 type batteries. The positive " + " side of the battery should make contact with the battery clip. The negative " – " side of the battery should make contact with the printed circuit board. After replacing the batteries, close the case and verify that the sensor unit is operating properly.

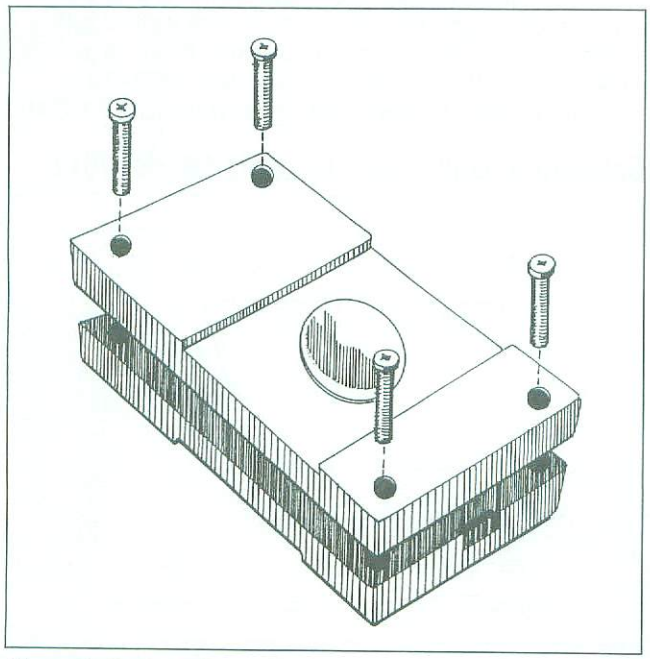

Figure 6. Replacing the batteries

Calibration

The A50030 is calibrated to factory specifications. NIST calibration is available upon request. User calibration of the unit can be accomplished by using the following test procedure:

Equipment Needed:

1 - A calibrated DC variac
2 - Shield check unit
3 - Reference plate

Test Procedure:

STEP 1. Attach one lead of the DC variac to the reference plate.

STEP 2. Place the Shield-Check onto the top of the reference plate.

STEP 3. Attach the other lead of the variac to the weighted probe and place onto the top metal contact of the Shield-Check.

STEP 4. Dial in the appropriate voltage, starting at 10 volts.

STEP 5. Apply the DC voltage, 10 volts and the LED will illuminate.

STEP 6. Reset the shield check and continue as above with the different voltage settings.

Specifications

1000D Discharge Simulator

Power: 120/240 VAC, 50/60 Hz
Size: 6.0″ x 4.5″ x 2.25″

Shield-Check Sensor

Power: Three 3 volt lithium coin cell batteries, Type #CR2032
Size: 4.2″ x 2.33″ x .85″